Optowell Co., Ltd.

SR65-7SG8016D26

pre 1.0

650nm Red LED Chip for Sensors

Features

: 650 nm wavelength range

: Top side_ Anode, Bottom side_Cathode

: Other configurations available on request

Description

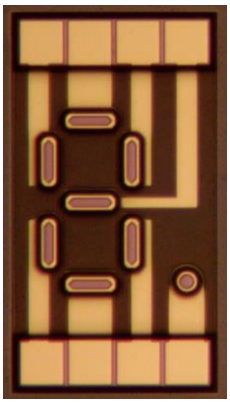

Applications

: complex displays in optical devices for laboratory, measurement, control- and medical equipment

Absolute Maximum Ratings

Parameter	Rating
Storage Temperature	-40 to 100 ℃
Operating Temperature	-20 to 70 ℃
Continuous Forward Current	20 mA
Continuous Reverse Voltage	5V (@10μA)

Demensions

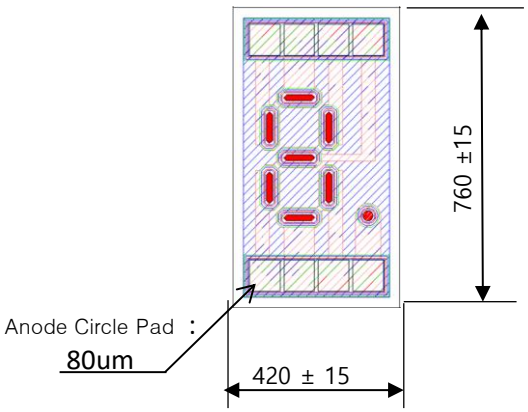

Die Height : 240 ± 20 ㎛

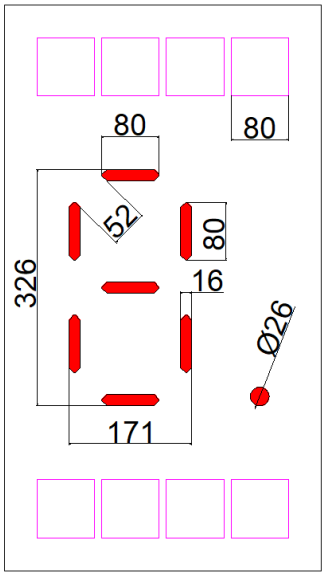

42,Ballyong-ro, Deokjin-gu, Jeonju-si, KOREA
Tel. +82-63-214-1186 Fax. +82-63-214-1137 www.optowell.com sales@optowell.com

Electro-Optics Characteristics (T_a=25℃ unless otherwise stated)

Parameters	Symbol	Specified			Unit	Test Conditions
		Min.	Typ.	Max.		
Total Radiant Flux	Φ_o		100		μW	I_f=5mA,
Total Radiant Flux	Φ_o		300		μW	I_f=20mA,
Peak Wavelength	λ_P	635	650	665	nm	I_f= 10 mA
Forward Current	I_f	0.01	-	20	mA	
Forward Voltage 1	V_{f1}		1.9	2.2	V	I_f=5mA,
Forward Voltage 2	V_{f2}		2.2	2.5	V	I_f=20mA,

*Current for one segment

Test Data were measured in TO header of wire bonded chip

Value is referenced to the vender's measurement system (correlation to customer product is required).

All Segemnet Emitting

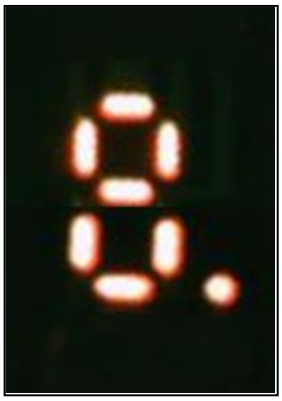

Notes

* These specifications are subject to change without notice.

NOTICE	The inherent design of this component causes it to be sensitive to electrostatic discharge(ESD). To prevent ESD-induced damage and/or degradation to equipment, take normal ESD precautions when handling this product

42,Ballyong-ro, Deokjin-gu, Jeonju-si, KOREA
Tel. +82-63-214-1186 Fax. +82-63-214-1137 www.optowell.com sales@optowell.com